Hybrid Stepper Motor

KL23H276-30-8B

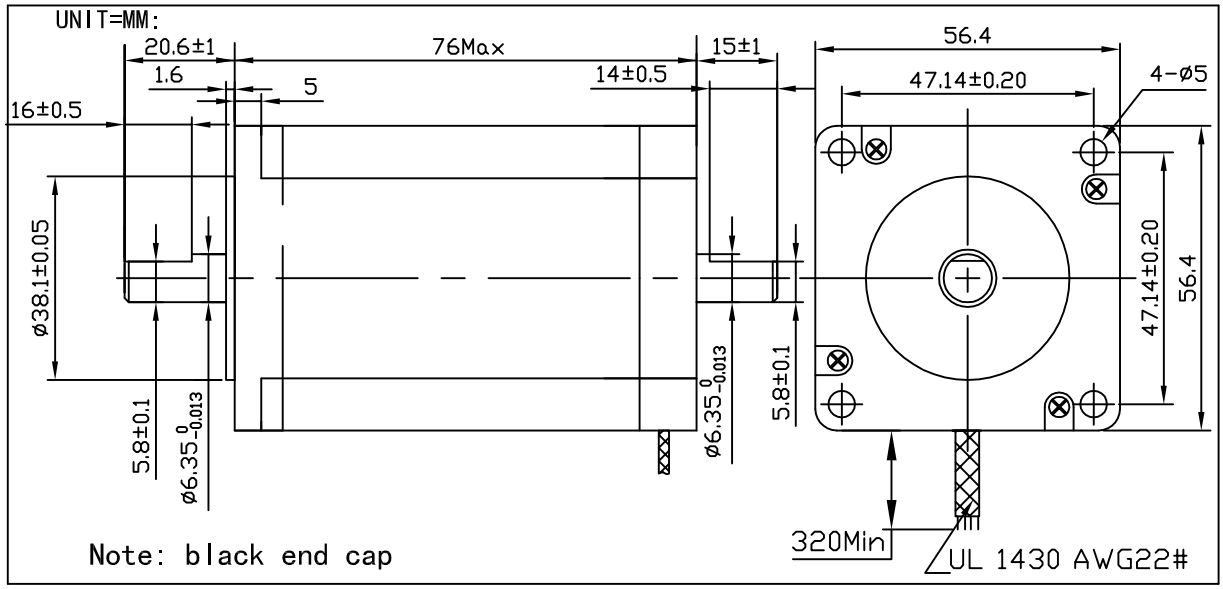

	STEP PHASE	RATED VOLTAGE	CURRENT /PHASE	RESISTANCE /PHASE	INDUCTANCE /PHASE	HOLDING TORQUE	ROTOR INERTIA	WEIGHT
	DEG/STEP	V	A	ohms	mH	OZ-IN	gcm^2	Kg
Unipolar	1.8	2.76	3.0	0.92	2.2	200	480	1.0
Bipolar (Series)		3.86	2.1	1.84	8.8	282		
Bipolar (Parallel)		1.93	4.2	0.46	2.2	282		

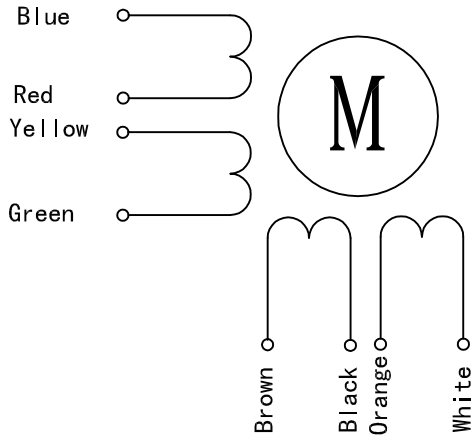

UL1430-AWG20#LENGTH320mm

Bipolar (Parallel) Connection

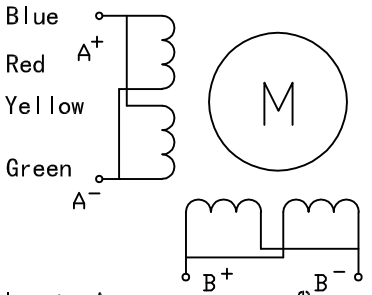

Blue & Yellow to A+
Red & Green to A−
Brown & Orange to B+
Black & White to B−

Bipolar (Series) Connection

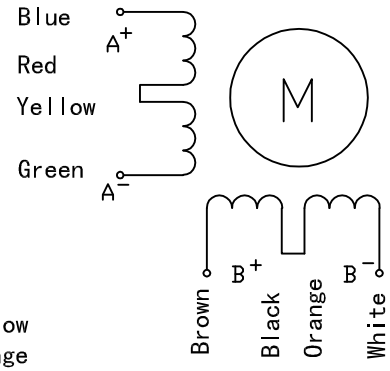

Blue to A+
Green to A−
Brown to B+
White to B−
Red & Yellow
Black & Orange

Unipolar Connection

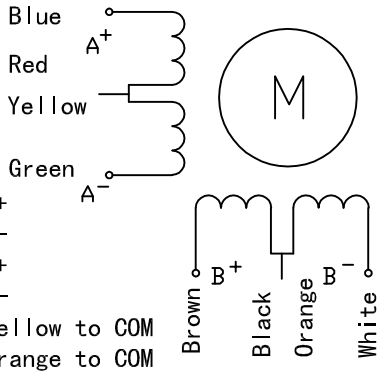

Blue to A+
Green to A−
Brown to B+
White to B−
Red & Yellow to COM
Black & Orange to COM